PUBLISHED: 28-NOV-2016
2022.0 DEFENDER (LE), 307-02

TRANSMISSION/TRANSAXLE COOLING - VEHICLES WITH: 8HP70 8-SPEED AUTOMATIC TRANSMISSION AWD

TRANSMISSION FLUID COOLER - TDV6 3.0L DIESEL (G2009244)

REMOVAL AND INSTALLATION

44.24.10	COOLER - OIL/FLUID - RENEW	3000 CC, TDV6	1.6	USED WITHINS

REMOVAL

NOTE:

- Removal steps in this procedure may contain installation details.
- Some variation in the illustrations may occur, but the essential information is always correct.
- Some components shown removed for clarity.

1.

WARNING:

Make sure to support the vehicle with axle stands.

Raise and support the vehicle.

transmissionmanual.com

2. Partially drain the cooling system.
Refer to: Cooling System Draining and Vacuum Filling (303-03A, General Procedures).

3. Remove the engine undershield.
Refer to: Engine Undershield (501-02, Removal and Installation).

4.

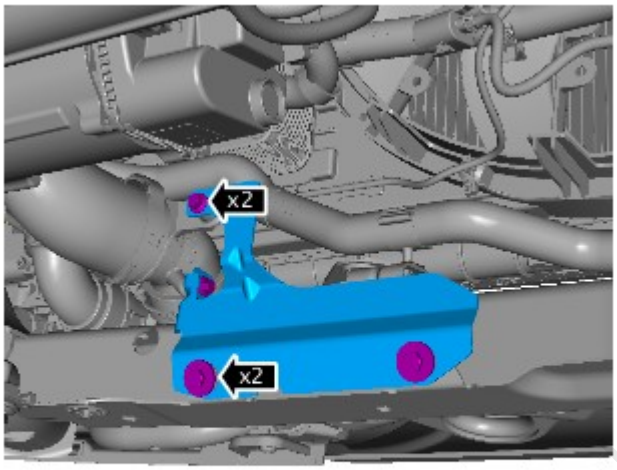

E195931

Torque: **9 Nm**

5.

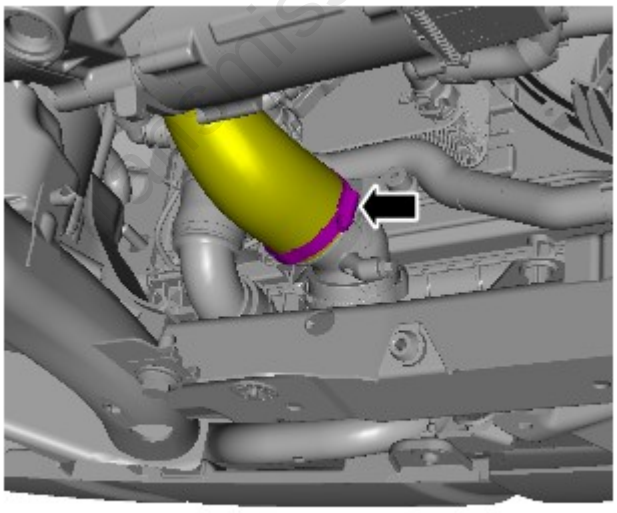

E195932

emissionmanuals.com

6.

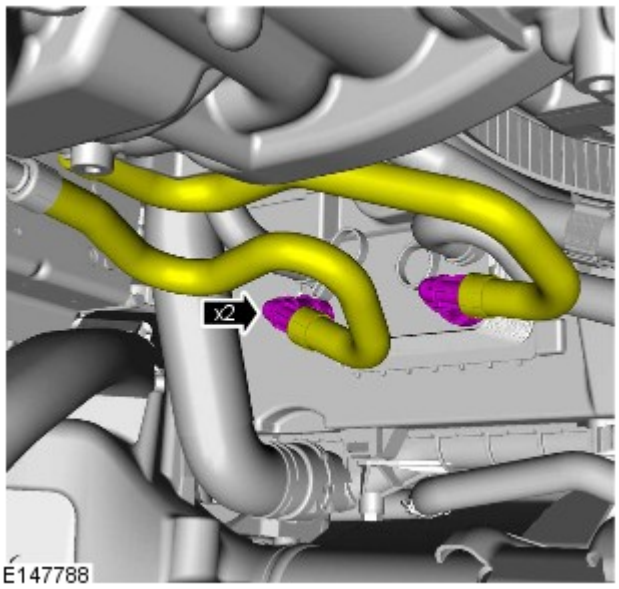

7.

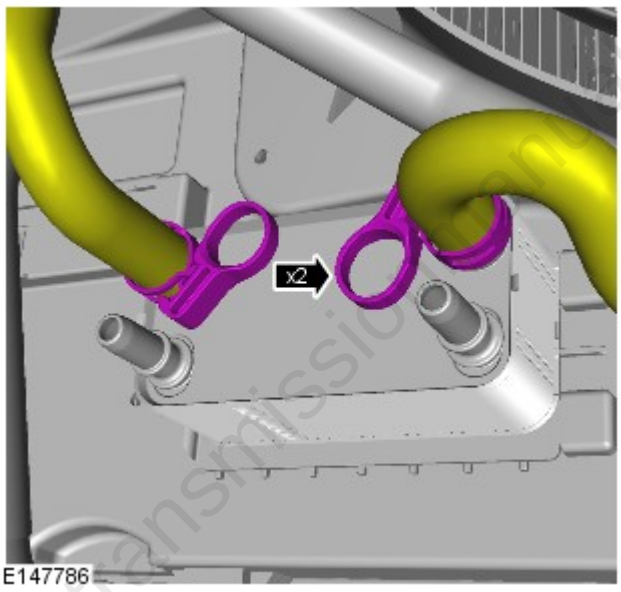

transmissionmanuals.com

8.

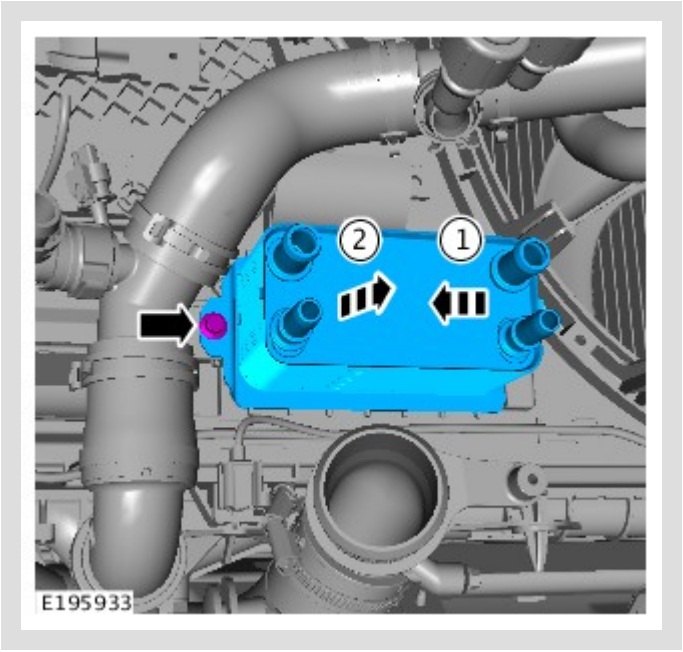

Torque: **6 Nm**

INSTALLATION

1.

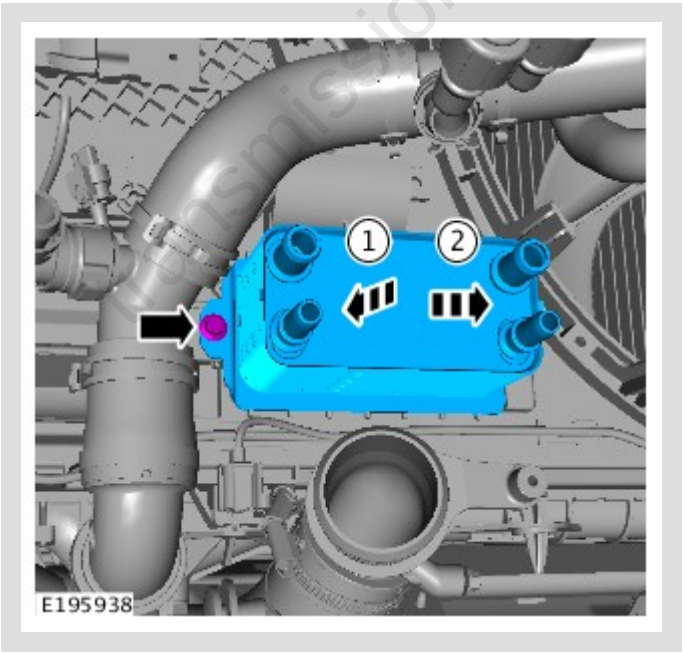

Torque: **6 Nm**

transmissionmanuals.com

2.

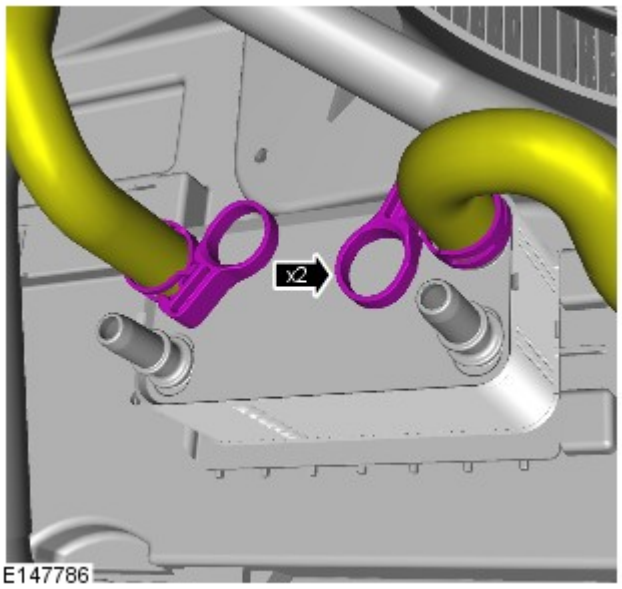

3.

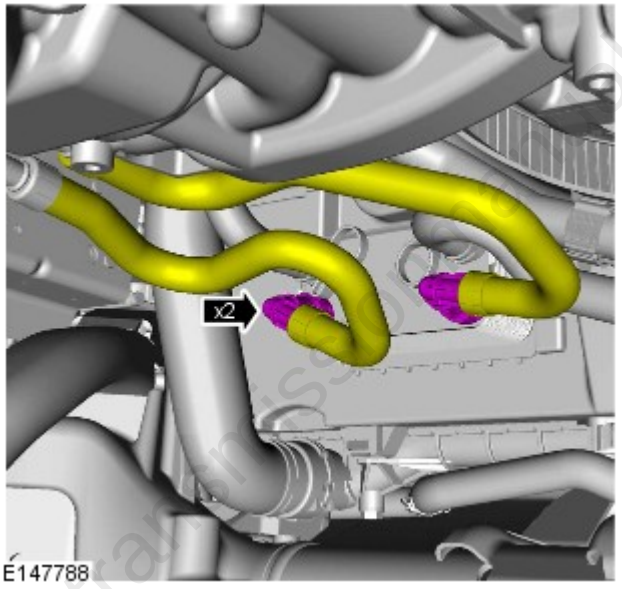

transmissionparts.com

4.

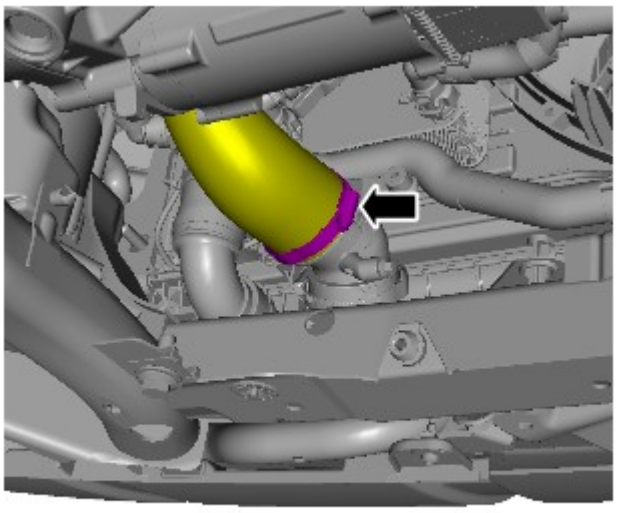

E195932

5.

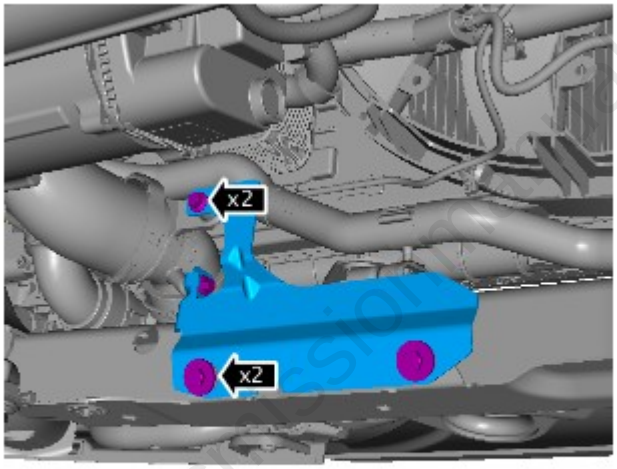

E195931

Torque: **9 Nm**

6. Check and top-up the transmission fluid level.
Refer to: Transmission Fluid Level Check (307-01, General Procedures).

7. Install the engine undershield.
Refer to: Engine Undershield (501-02, Removal and Installation).

8. Refill the cooling system.
Refer to: Cooling System Draining and Vacuum Filling (303-03A, General Procedures).

transmissionmanuals.com